Write your name here

Surname	Other names

Pearson Edexcel GCE

Centre Number | Candidate Number

Core Mathematics C4

Advanced

Friday 23 June 2017 – Morning

Time: 1 hour 30 minutes

Paper Reference **6666/01**

You must have:
Mathematical Formulae and Statistical Tables (Pink)

Total Marks

Candidates may use any calculator allowed by the regulations of the Joint Council for Qualifications. Calculators must not have the facility for symbolic algebra manipulation, differentiation and integration, or have retrievable mathematical formulae stored in them.

Instructions

- Use **black** ink or ball-point pen.
- If pencil is used for diagrams/sketches/graphs it must be dark (HB or B). Coloured pencils and highlighter pens must not be used.
- **Fill in the boxes** at the top of this page with your name, centre number and candidate number.
- Answer **all** questions and ensure that your answers to parts of questions are clearly labelled.
- Answer the questions in the spaces provided – *there may be more space than you need.*
- You should show sufficient working to make your methods clear. Answers without working may not gain full credit.
- When a calculator is used, the answer should be given to an appropriate degree of accuracy.

Information

- The total mark for this paper is 75.
- The marks for **each** question are shown in brackets – *use this as a guide as to how much time to spend on each question.*

Advice

- Read each question carefully before you start to answer it.
- Try to answer every question.
- Check your answers if you have time at the end.

Turn over ▶

P49109A

©2017 Pearson Education Ltd.

1/1/1/1/1/

P 4 9 1 0 9 A 0 1 3 2

Pearson

https://xtremepape.rs/

Leave blank

1. The curve C has parametric equations

$$x = 3t - 4, \quad y = 5 - \frac{6}{t}, \quad t > 0$$

(a) Find $\frac{dy}{dx}$ in terms of t

(2)

The point P lies on C where $t = \frac{1}{2}$

(b) Find the equation of the tangent to C at the point P. Give your answer in the form $y = px + q$, where p and q are integers to be determined.

(3)

(c) Show that the cartesian equation for C can be written in the form

$$y = \frac{ax + b}{x + 4}, \quad x > -4$$

where a and b are integers to be determined.

(3)

DO NOT WRITE IN THIS AREA
DO NOT WRITE IN THIS AREA
DO NOT WRITE IN THIS AREA

P 4 9 1 0 9 A 0 2 3 2
https://xtremepape.rs/

Leave blank

Question 1 continued

DO NOT WRITE IN THIS AREA
DO NOT WRITE IN THIS AREA
DO NOT WRITE IN THIS AREA

https://xtremepape.rs/

Leave blank

Question 1 continued

DO NOT WRITE IN THIS AREA

DO NOT WRITE IN THIS AREA

DO NOT WRITE IN THIS AREA

https://xtremepape.rs/

Leave blank

Question 1 continued

Q1

(Total 8 marks)

DO NOT WRITE IN THIS AREA
DO NOT WRITE IN THIS AREA
DO NOT WRITE IN THIS AREA

https://xtremepape.rs/

Leave blank

2. $$f(x) = (2 + kx)^{-3}, \quad |kx| < 2, \text{ where } k \text{ is a positive constant}$$

The binomial expansion of f(x), in ascending powers of x, up to and including the term in x^2 is

$$A + Bx + \frac{243}{16}x^2$$

where A and B are constants.

(a) Write down the value of A.

(1)

(b) Find the value of k.

(3)

(c) Find the value of B.

(2)

DO NOT WRITE IN THIS AREA
DO NOT WRITE IN THIS AREA
DO NOT WRITE IN THIS AREA

P 4 9 1 0 9 A 0 6 3 2
https://xtremepape.rs/

Leave blank

Question 2 continued

Q2

(Total 6 marks)

DO NOT WRITE IN THIS AREA
DO NOT WRITE IN THIS AREA
DO NOT WRITE IN THIS AREA

https://xtremepape.rs/

Leave blank

3.

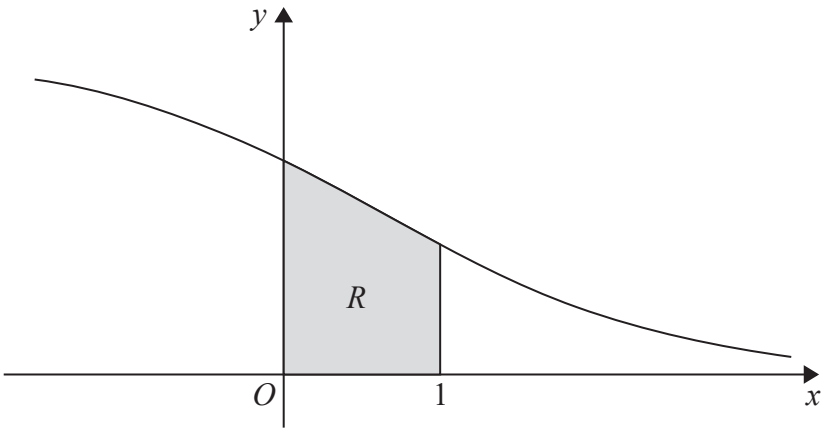

Figure 1

Figure 1 shows a sketch of part of the curve with equation $y = \dfrac{6}{(e^x + 2)}$, $x \in \mathbb{R}$

The finite region R, shown shaded in Figure 1, is bounded by the curve, the y-axis, the x-axis and the line with equation $x = 1$

The table below shows corresponding values of x and y for $y = \dfrac{6}{(e^x + 2)}$

x	0	0.2	0.4	0.6	0.8	1
y	2		1.71830	1.56981	1.41994	1.27165

(a) Complete the table above by giving the missing value of y to 5 decimal places.
(1)

(b) Use the trapezium rule, with all the values of y in the completed table, to find an estimate for the area of R, giving your answer to 4 decimal places.
(3)

(c) Use the substitution $u = e^x$ to show that the area of R can be given by

$$\int_a^b \frac{6}{u(u+2)}\,du$$

where a and b are constants to be determined.
(2)

(d) Hence use calculus to find the exact area of R.
[*Solutions based entirely on graphical or numerical methods are not acceptable.*]
(6)

DO NOT WRITE IN THIS AREA
DO NOT WRITE IN THIS AREA
DO NOT WRITE IN THIS AREA

P 4 9 1 0 9 A 0 8 3 2
https://xtremepape.rs/

Leave blank

Question 3 continued

DO NOT WRITE IN THIS AREA
DO NOT WRITE IN THIS AREA
DO NOT WRITE IN THIS AREA

https://xtremepape.rs/

Leave blank

Question 3 continued

DO NOT WRITE IN THIS AREA

DO NOT WRITE IN THIS AREA

DO NOT WRITE IN THIS AREA

https://xtremepape.rs/

Leave blank

Question 3 continued

(Total 12 marks)

Q3

DO NOT WRITE IN THIS AREA
DO NOT WRITE IN THIS AREA
DO NOT WRITE IN THIS AREA

https://xtremepape.rs/

Leave blank

4. The curve C has equation

$$4x^2 - y^3 - 4xy + 2^y = 0$$

The point P with coordinates $(-2, 4)$ lies on C.

(a) Find the exact value of $\frac{dy}{dx}$ at the point P.

(6)

The normal to C at P meets the y-axis at the point A.

(b) Find the y coordinate of A, giving your answer in the form $p + q\ln 2$, where p and q are constants to be determined.

(3)

DO NOT WRITE IN THIS AREA
DO NOT WRITE IN THIS AREA
DO NOT WRITE IN THIS AREA

https://xtremepape.rs/

Leave blank

Question 4 continued

DO NOT WRITE IN THIS AREA
DO NOT WRITE IN THIS AREA
DO NOT WRITE IN THIS AREA

https://xtremepape.rs/

Leave blank

Question 4 continued

DO NOT WRITE IN THIS AREA

DO NOT WRITE IN THIS AREA

DO NOT WRITE IN THIS AREA

https://xtremepape.rs/

Leave blank

Question 4 continued

Q4

(Total 9 marks)

DO NOT WRITE IN THIS AREA
DO NOT WRITE IN THIS AREA
DO NOT WRITE IN THIS AREA

https://xtremepape.rs/

Leave blank

5.

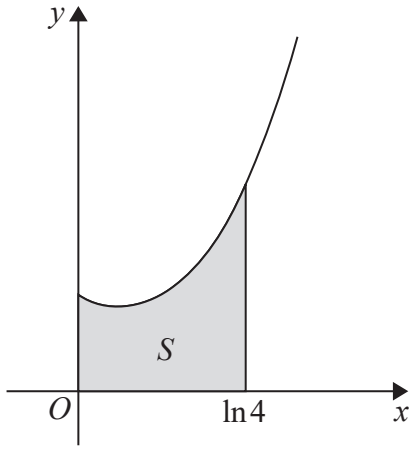

Diagram not drawn to scale

Figure 2

The finite region S, shown shaded in Figure 2, is bounded by the y-axis, the x-axis, the line with equation $x = \ln 4$ and the curve with equation

$$y = e^{x} + 2e^{-x}, \qquad x \geqslant 0$$

The region S is rotated through 2π radians about the x-axis.

Use integration to find the exact value of the volume of the solid generated. Give your answer in its simplest form.

[*Solutions based entirely on graphical or numerical methods are not acceptable.*]

(7)

DO NOT WRITE IN THIS AREA
DO NOT WRITE IN THIS AREA
DO NOT WRITE IN THIS AREA

https://xtremepape.rs/

Leave blank

Question 5 continued

DO NOT WRITE IN THIS AREA
DO NOT WRITE IN THIS AREA
DO NOT WRITE IN THIS AREA

https://xtremepape.rs/

Leave blank

Question 5 continued

DO NOT WRITE IN THIS AREA

DO NOT WRITE IN THIS AREA

DO NOT WRITE IN THIS AREA

https://xtremepape.rs/

Leave blank

Question 5 continued

(Total 7 marks)

Q5

DO NOT WRITE IN THIS AREA
DO NOT WRITE IN THIS AREA
DO NOT WRITE IN THIS AREA

https://xtremepape.rs/

Leave blank

6. With respect to a fixed origin O, the lines l_1 and l_2 are given by the equations

$$l_1 : \mathbf{r} = \begin{pmatrix} 4 \\ 28 \\ 4 \end{pmatrix} + \lambda \begin{pmatrix} -1 \\ -5 \\ 1 \end{pmatrix}, \qquad l_2 : \mathbf{r} = \begin{pmatrix} 5 \\ 3 \\ 1 \end{pmatrix} + \mu \begin{pmatrix} 3 \\ 0 \\ -4 \end{pmatrix}$$

where λ and μ are scalar parameters.

The lines l_1 and l_2 intersect at the point X.

(a) Find the coordinates of the point X.

(3)

(b) Find the size of the acute angle between l_1 and l_2, giving your answer in degrees to 2 decimal places.

(3)

The point A lies on l_1 and has position vector $\begin{pmatrix} 2 \\ 18 \\ 6 \end{pmatrix}$

(c) Find the distance AX, giving your answer as a surd in its simplest form.

(2)

The point Y lies on l_2. Given that the vector $\overrightarrow{YA}$ is perpendicular to the line l_1

(d) find the distance YA, giving your answer to one decimal place.

(2)

The point B lies on l_1 where $|\overrightarrow{AX}| = 2|\overrightarrow{AB}|$.

(e) Find the two possible position vectors of B.

(3)

DO NOT WRITE IN THIS AREA
DO NOT WRITE IN THIS AREA
DO NOT WRITE IN THIS AREA

P 4 9 1 0 9 A 0 2 0 3 2
https://xtremepape.rs/

Leave blank

Question 6 continued

DO NOT WRITE IN THIS AREA
DO NOT WRITE IN THIS AREA
DO NOT WRITE IN THIS AREA

https://xtremepape.rs/

Leave blank

Question 6 continued

DO NOT WRITE IN THIS AREA

DO NOT WRITE IN THIS AREA

DO NOT WRITE IN THIS AREA

https://xtremepape.rs/

Leave blank

Question 6 continued

(Total 13 marks)

Q6

DO NOT WRITE IN THIS AREA
DO NOT WRITE IN THIS AREA
DO NOT WRITE IN THIS AREA

https://xtremepape.rs/

Leave blank

7.

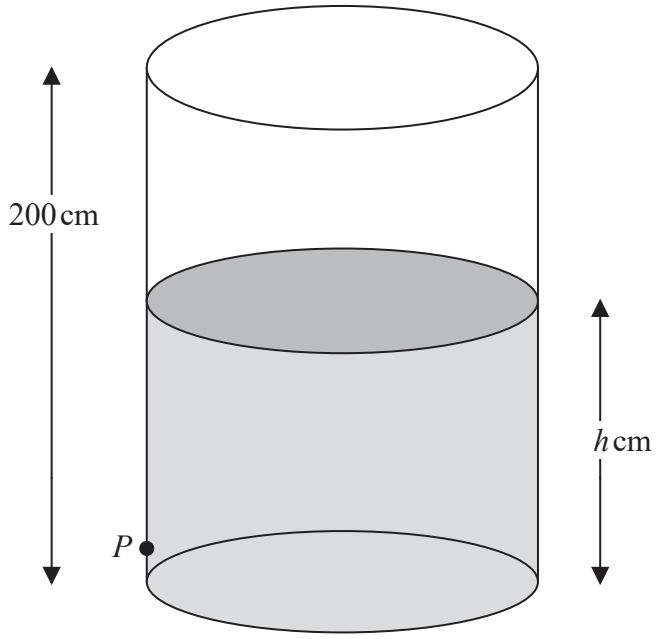

Diagram not drawn to scale

Figure 3

Figure 3 shows a vertical cylindrical tank of height 200 cm containing water.
Water is leaking from a hole P on the side of the tank.

At time t minutes after the leaking starts, the height of water in the tank is h cm.

The height h cm of the water in the tank satisfies the differential equation

$$\frac{dh}{dt} = k(h-9)^{\frac{1}{2}}, \qquad 9 < h \leqslant 200$$

where k is a constant.

Given that, when $h = 130$, the height of the water is falling at a rate of 1.1 cm per minute,

(a) find the value of k.

(2)

Given that the tank was full of water when the leaking started,

(b) solve the differential equation with your value of k, to find the value of t when $h = 50$

(6)

DO NOT WRITE IN THIS AREA
DO NOT WRITE IN THIS AREA
DO NOT WRITE IN THIS AREA

https://xtremepape.rs/

Leave blank

Question 7 continued

DO NOT WRITE IN THIS AREA
DO NOT WRITE IN THIS AREA
DO NOT WRITE IN THIS AREA

https://xtremepape.rs/

Leave blank

Question 7 continued

DO NOT WRITE IN THIS AREA

DO NOT WRITE IN THIS AREA

DO NOT WRITE IN THIS AREA

https://xtremepape.rs/

Leave blank

Question 7 continued

(Total 8 marks)

Q7

DO NOT WRITE IN THIS AREA
DO NOT WRITE IN THIS AREA
DO NOT WRITE IN THIS AREA

https://xtremepape.rs/

Leave blank

8.

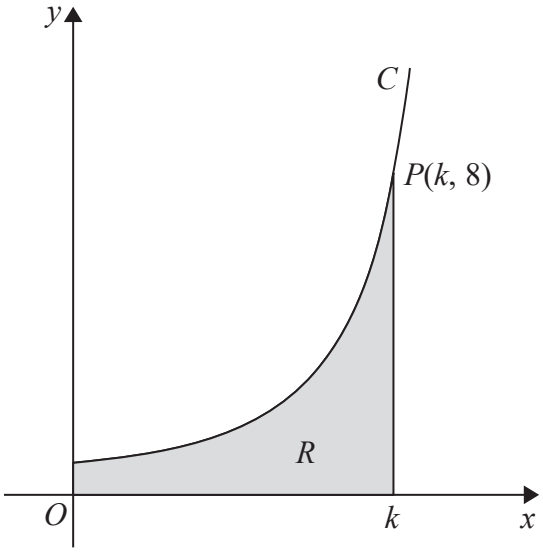

Diagram not drawn to scale

Figure 4

Figure 4 shows a sketch of part of the curve C with parametric equations

$$x = 3\theta\sin\theta, \qquad y = \sec^3\theta, \qquad 0 \leqslant \theta < \frac{\pi}{2}$$

The point $P(k, 8)$ lies on C, where k is a constant.

(a) Find the exact value of k.

(2)

The finite region R, shown shaded in Figure 4, is bounded by the curve C, the y-axis, the x-axis and the line with equation $x = k$.

(b) Show that the area of R can be expressed in the form

$$\lambda\int_{\alpha}^{\beta}\left(\theta\sec^2\theta + \tan\theta\sec^2\theta\right)\mathrm{d}\theta$$

where λ, α and β are constants to be determined.

(4)

(c) Hence use integration to find the exact value of the area of R.

(6)

DO NOT WRITE IN THIS AREA
DO NOT WRITE IN THIS AREA
DO NOT WRITE IN THIS AREA

P 4 9 1 0 9 A 0 2 8 3 2
https://xtremepape.rs/

Leave blank

Question 8 continued

DO NOT WRITE IN THIS AREA
DO NOT WRITE IN THIS AREA
DO NOT WRITE IN THIS AREA

https://xtremepape.rs/

Leave blank

Question 8 continued

DO NOT WRITE IN THIS AREA

DO NOT WRITE IN THIS AREA

DO NOT WRITE IN THIS AREA

https://xtremepape.rs/

Leave blank

Question 8 continued

DO NOT WRITE IN THIS AREA
DO NOT WRITE IN THIS AREA
DO NOT WRITE IN THIS AREA

https://xtremepape.rs/

Leave blank

Question 8 continued

Q8

(Total 12 marks)

TOTAL FOR PAPER: 75 MARKS

END

DO NOT WRITE IN THIS AREA

DO NOT WRITE IN THIS AREA

DO NOT WRITE IN THIS AREA

https://xtremepape.rs/